# AX16255 SERIES

## External Dimensions

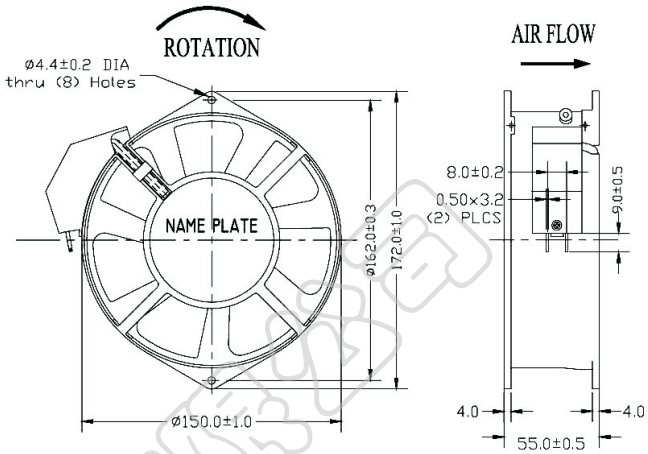


Frame:Aluminum Alloy
Impeller:Plastic(UL:94V-0)
Motor Structure:Shaded Pole Induction Motor.
Motor Protection:Impedance Protect.
Lead wire:UL1015 AWG22
OPERATING TEMP*:-10℃~70℃
*:-10℃~60℃ for fans with sleeve/ball combination bearings.

## Specifications(Nominal)

*:Noise is measured at the distance of one (1)meter from the axis of intake.

Bearing type: ◎=Ball ※=Sleeve ○=1B1S ●=Hypro bearing

| Frame size (mm) | Model No. | Bearing System Type | Volt. (VAC) | Freq. (Hz) | Current (A) | Power (W) | Rated Speed (rpm) | Maximum AirFlow (CMM) | Maximum AirFlow (CFM) | Maximum Pressure (InAq) | Maximum Pressure (mmAq) | *Noise Level (dB/A) | Weight (g) |
|---|---|---|---|---|---|---|---|---|---|---|---|---|---|
| 162x150x55 | AX15552HB | ◎ | 230 | 50/60 | 0.25/0.22 | 36.00/33.00 | 2700/3000 | 4.528/4.924 | 160.0/174.0 | 0.483/0.402 | 12.268/10.210 | 52.0/56.0 | 890 |

Specifications subject to change without notice.

50Hz

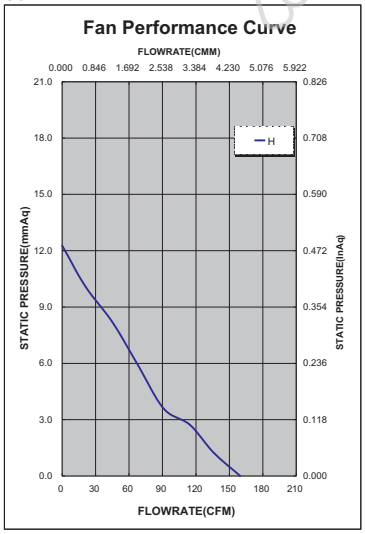


60Hz

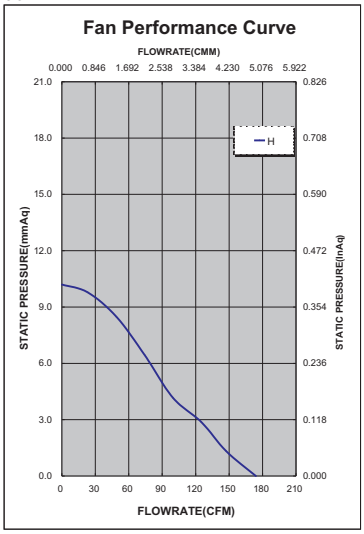


*Safety approvals

| | | | | |
|---|---|---|---|---|
| ✓ | ✓ | | ✓ | ✓ |

©COPYRIGHT 2008 ADDA CORPORATION.ALL RIGHTS RESERVED. ADDA CORPORATION AND ADDA CORPORATION LOGO ARE TRADEMARKS OR SERVICE MARKS OF ADDA CORPORATION.